SCHICK
Dentalgeräte

Georg Schick Dental GmbH
Lehenkreuzweg 12
D-88433 Schemmerhofen

Telefon +49 7356 9500-0
Telefax +49 7356 9500-95
E-Mail info@schick-dental.de
Internet www.schick-dental.de

# Operating Instructions
# SCHICK - Milling Machine HZ 90

# SCHICK - Milling Machine HZ 90

**Index**



## 1. Equipment and Parts Supplied

| | |
|---|---|
| Milling Machine HZ 90 complete | 2005 |
| Milling Machine HZ 90 | 2000 |
| Control unit SM-HZ | 2100 |
| Connection cable 1m | 2108 |
| Foot-switch ( for electro-magnet ) | 2110 |
| Foot-switch ( for motor ) | 4260 |
| SM-Motor with cable and milling spundle (chuck 2,35mm) | 4100/02 |
| Milling dish | 2060 |
| Swivelling model table | 2121 |
| Key to change the chuck | 4115 |
| Counterstay wrench | 4113 |

**Accessories / Spare-Parts:**

| | |
|---|---|
| Surveying spindle | 2052 |
| Milling dish insert | 4920 |
| Milling carriage | 2182 |
| Light equipment | 2002 |
| Lamp | 4740 |
| SM-Motor with special cable 2107 | 4150/02 |
| Milling spindle | 4310/03 |
| Chuck 2,35 mm | 4114 |
| Chuck 3,0 mm | 4117 |
| Chuck 1,6 mm | 4116 |
| Motor with handpiece and cable complete ( can separatly be used with the control unit - see instruction point 1.6 ) | 4100 |

## 2. Technical Data

| | |
|---|---|
| Power voltage | 115 / 230 V. a.c. |
| Power frequency | 50 / 60 Hz |
| Power consumption | 80 W |
| Equipment protection | built-in overload protection |
| Motor voltage at maximum speed | 23,5 V d.c. |
| Speed of milling spindle | 0 - 30.000 rpm, infinitely variable |
| Height ( max./min. ) / Width / Depth | 420/320 mm / 210 mm / 270 mm |
| Weight complete | about 16 kgs net |

## 3. Operation

### 1. Control unit

1.1 Put connecting cable **(7)** into sleeve **(6)** of control unit and into sleeve **(8)** of milling machine and screw it in.

1.2 Switch on by pushing switch **(1)** “ON” - switch is illuminated. Only then all the other electrical functions can be operated. To switch the unit off press switch **(1)** “OFF” again.

1.3 To operate the milling spindle push button **(3)** “M2”. Then push button **(2)** “INT” to switch the motor on; by pushing button **(2)** “EXT” the motor will be switched off.
This milling motor also can be operated with the supplied foot switch - then push button **(2)** “EXT”. The foot switch with the 5-pole plug has to be put into the corresponding socket at the rear side of the control unit.

1.4 To operate the electro-magnetic couplings for fastening the arm the supplied foot-switch is to be used. The foot-switch with the 2-pole plug has to be put into the corresponding socket at the rear side of the control unit.

1.5 The speed of the milling motor resp. The additional motor ( see 1.6 ) can infinitely variable be adjusted between 0 and 30.000 r.p.m. by using the sliding resistor **(5)**.

1.6 A seperate SM-Motor with normal SM-handpiece can be used by putting its plug into the sleeve **(4)**. To use this motor push switch **(3)** “M1”.
To switch ON or OFF resp. to change the speed see point 1.3 and 1.5.

1.7 **Failures**
If the milling spindle resp. the handpiece is overloaded or blocked, the apparatus is switched off for security reasons. By pushing the main switch **(1)** unit has to be switched off and then to be switched on again. When overheated, the thermic switch on the rear side of the control unit cuts the current. When temperature is normal again the black pin may be pushed in again.

### 2. Milling Machine

2.1 Fastening and loosening of the arm by the electro-magnetic couplings is done with the foot switch.

2.2 To turn the support arm to the desired height, lever **(9)** has to be loosened by turning slightly left. Then use the handwheel **(10)** mounted at the right hand side to adjust the pillar higher or lower.
After that the pillar has to be fixed with lever **(9)**. Lever can be put into individual desired positions by pulling and turning; the lever is fixed again by letting them loose.

2.3 Swivelling model table and milling carriage can be loosened with lever **(17)**. For that reason loosen lever by turning, pull it in the axial direction and then take model table or milling carriage out. To place model table or milling carriage turn lever **(17)** to vertical position and pull it in the axial direction. Put bolt of model table or milling carriage in the boring, let lever loose and then turn lever slightly clockwise. If desired, lever **(17)** can be turned in any other position. For that reason the screw at this lever has to be loosened, lever has to be turned in the position desired and then screw has to be fixed again.

2.4 The milling spindle holder can be fixed in any desired postion by turning knurled knob **(13)**. At the top side of the milling spindle holder there are two grip sleeves for depth stop and for tension of the spring.
The tension of spring can be adjusted in each position between the upper and the lowest fix point. The spindle or depth stop **(16)** shows a radial graduation of 50 x 0,01 mm and an axial graduation of 0,5 mm.
One complete rotation of this spindle is 0,5 mm. The complete vertical way of the milling spindle holder is 20 mm. If drill-lever **(14)** is not used, it can be screwd out and be placed in the boring at the backside of the main arm.

2.5 To pull milling spindle out knurled screw **(11)** has to be loosened. When putting milling spindle please push spindle until it reaches the stop point. Lever **(12)** - which is used ot open and to close the chuck - has to be in the left position with closed chuck. Then fasten knurled screw **(11)** again.

The surveying spindle **(19)** - delivered as accessory - can be put into milling spindle holder in the same way. If not used the surveying spindle is placed in the boring **(15)** at the rear side of the arm.

## 3. Swivelling model table

3.1 After a long period of use it is possible that the model table **(18)** is not longer strong enough. This can be corrected by turning the set screw at the bottom side of the model talbe.

## 4. Exchange of tools

To open the chuck turn lever **(12)** right until it stops. Then you can pull out the tool. After the new tool is placed in the chuck turn lever **(12)** left until it stops. Considering precision and life time of the chuck, be sure that a tool is always - even when the machine is not in operation - firmly mounted in the chuck

**ATTENTION: Exchange of tools only when motor is stopped !.**

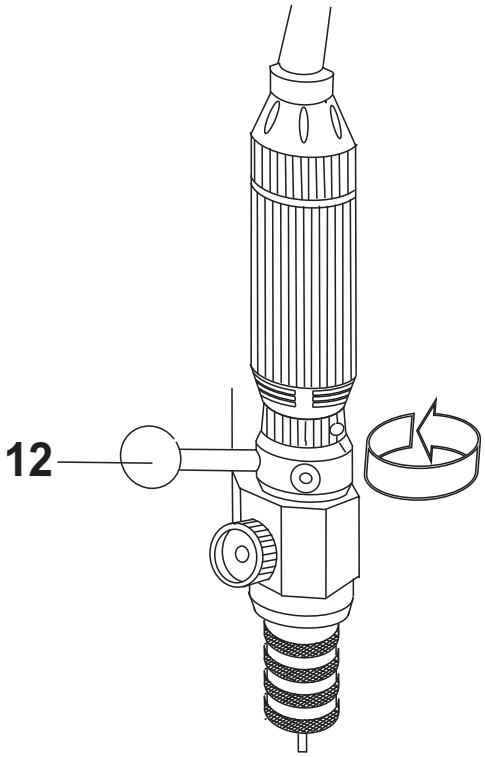

# SCHICK - Milling Machine HZ 90

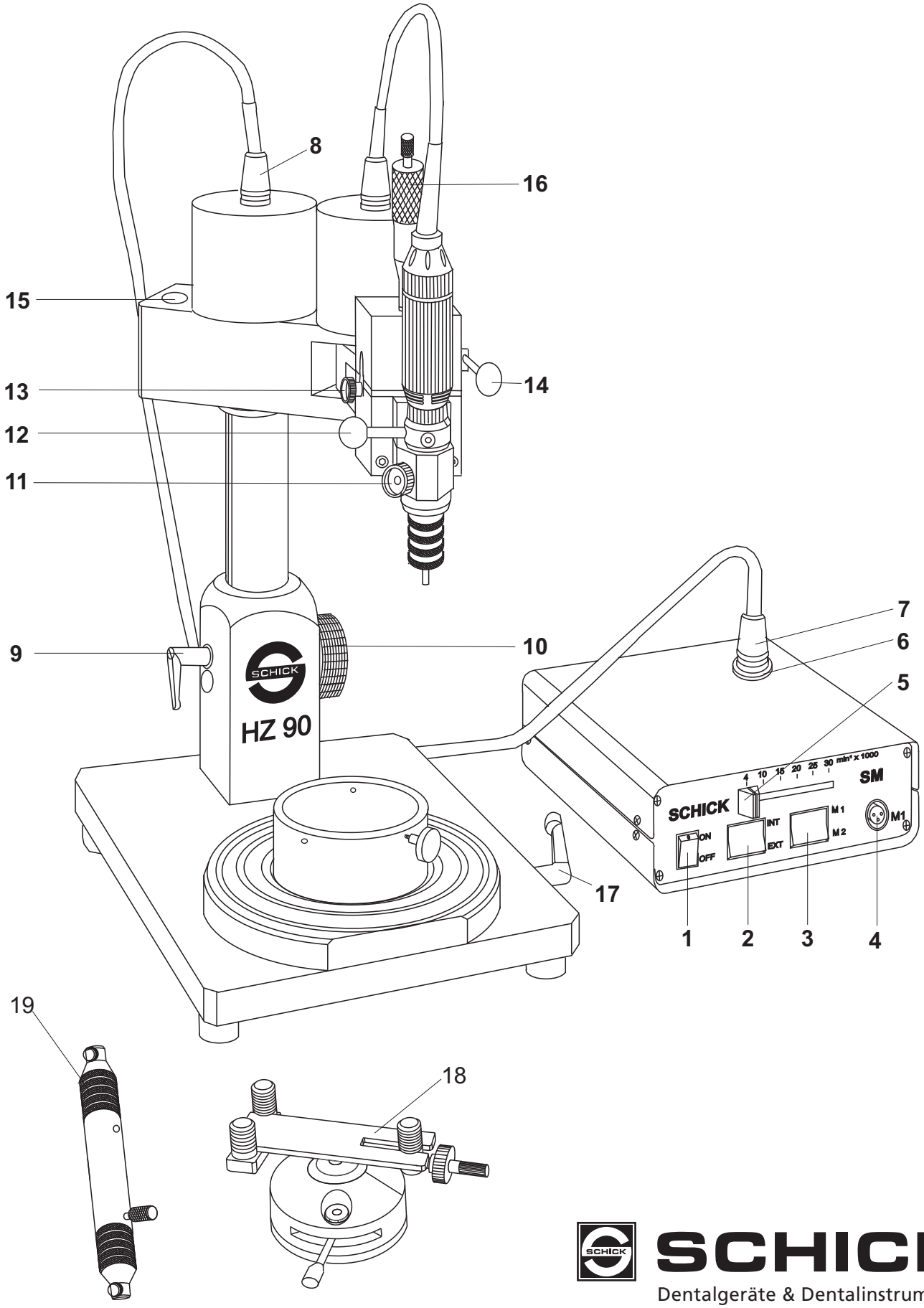


SCHICK
Dentalgeräte & Dentalinstrumente

## 5. Exchange of the chuck

5.1 Open the chuck
5.2 Turn the chuck **24** with the special key **23** with a sharp movement and unscrew it, in the sense of direction sign.
5.3 Screw chuck **24** with the special key **23** in the sense of direction sign until feeling of resistance.
5.4 If after a long using period the chuck is blocked, remove the milling spindle from the motor with pin **20** in order to maintain the carrier **21** with the enclosed special key **22**.

**Pease note:** In the chuck is a stroke for short shafts, this could be removed or replaced as required.

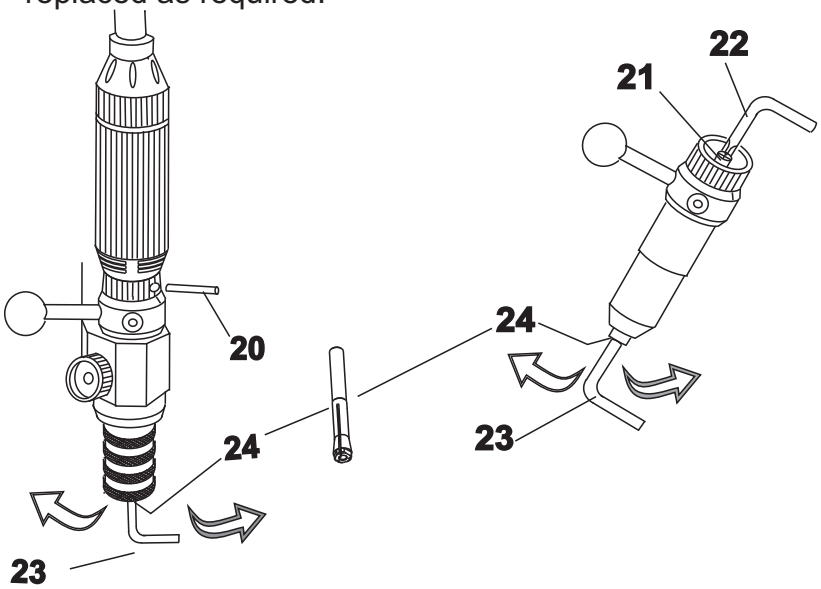


## 6.0 Change of carbon brushes

6.1 Unscrew cap **30** in direction of arrow and pull back. Disconnect cable plug.
6.2 Turn by finger withhold spring **31** in the sense of direction sign to the stop
6.3 Remove the old carbon brushes
6.4 Put the new carbon brushes **32**. Make sure that the positioning pin **33** has entered into the hole **34**. Do not twist the positioning pin.
The copper - wire of the carbon must stand freely.
6.5 Use finger to turn withhold spring in direction of arrow until stop.
Connect cable plug ( watch position ).
6.6 Close cap **30** and rescrew it. Be careful not to twist the cable.

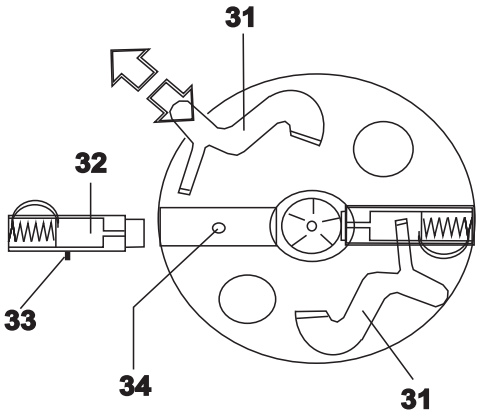


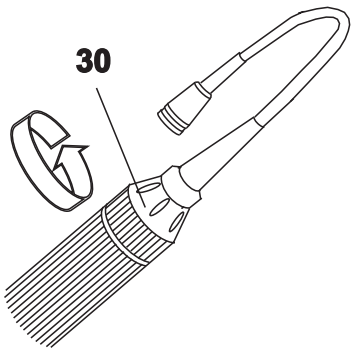

# Declaration of Conformity

We, **GEORG SCHICK DENTAL GmbH**
Lehenkreuz 12
88433 Schemmerhofen

declare herewith, that the product

**Milling unit HZ 90 2005**

is in conformity with the following provisions of Directive:

| | |
|---|---|
| 92/59/EWG | (allgemeine Produktsicherheit) |
| 89/392/EWG | (Maschinenrichtlinie) |
| 73/23/EWG | (Niederspannungsrichtlinie) |

According to following standards:

| | |
|---|---|
| EN 60204/1 | (Elektrische Ausrüstung von Maschinen) |
| EN 55014 | (Funkentstörung) |
| EN 292 | (Sicherheit von Maschinen) |
| DIN/VDE 0875/1 | (Sicherheit von Maschinen) |

Schemmerhofen, January 1997

W. Schick
Geschäftsführer